□□□□□□□□□□□□PY-5500

□□□□□□□&□□□□□□□□□ □□□□□□□□□□□ □□&□□□□□□□□□□

□□□

- □□□□□ MIFARE® □□□
- □□□□□□□□
- □□□□
- □□□□□□□□□□□□□□□□□□□□□□□□□ MIFARE® □□□□□□□□□/□ MIFARE® □□□□□□□□□□□□□□□□□□
- □□□□□□□□□□□□□□□□□□ 2□□□□□□200□□ □□□
- □□□□□□□□□□□□□□□□□ 1□□□□□□ 50□□□□□□ □□□
- □□□□□□□□□□□□□□□□ □□12□□□□
- □□□□□□□□□□□□□□□□
- □□□□□□□
- □□□□□□□□
- □□□□□□□□□□□□□□□
- □□□□□□□□ MIFARE® □□□□□□□□□□□

□□□□□□
□□□□□□6.0V□4□5□□□□□□□
□□□□□□<100μA
□□□□□□<200mA
□□□□□□10□□□□
□□□□□□□□4.5V
□□□□□□> 25mm
□□□□□□0℃□70℃
□□□□□□≤80□

□□□□□□

Part Name

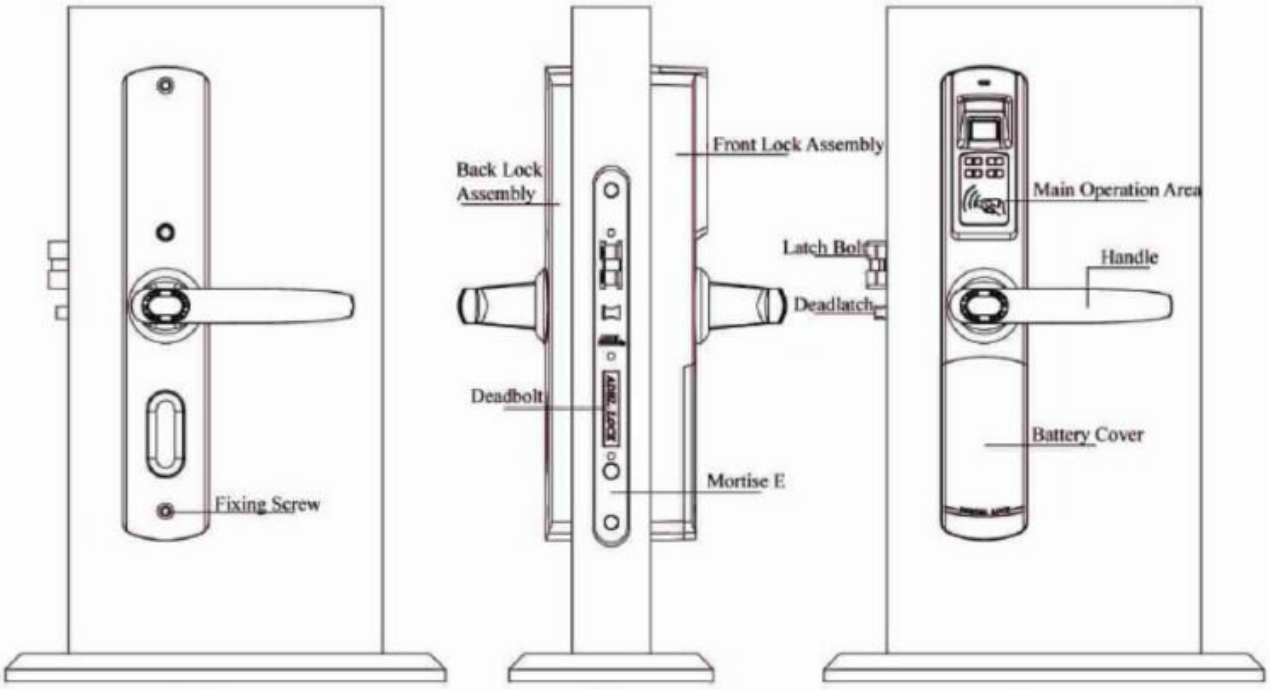

Back Side Front

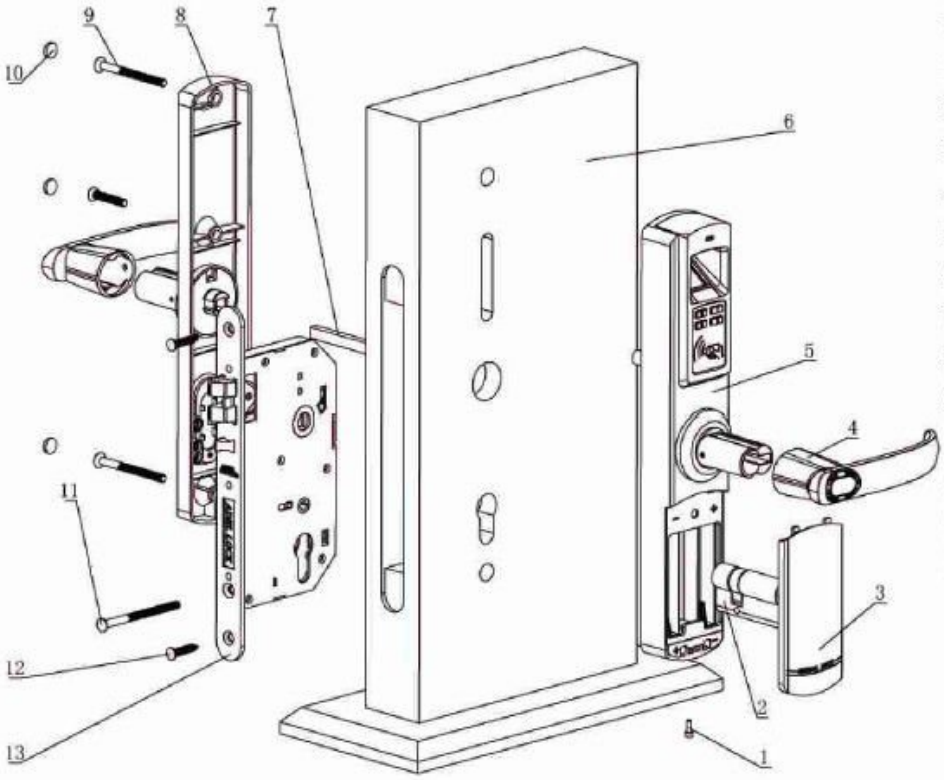

Part Name:

1. Hexagonal screw (M3*8)
2. Cylinder
3. Battery cover
4. Handle
5. Front lock assembly
6. Door
7. Square shaft
8. Back lock assembly
9. Fixing screw (M5)
10. Screw cover
11. Cylinder fixing screw (M5*70)
12. Wood screw (M4*25)
13. Mortise

DIGITAL LOCK
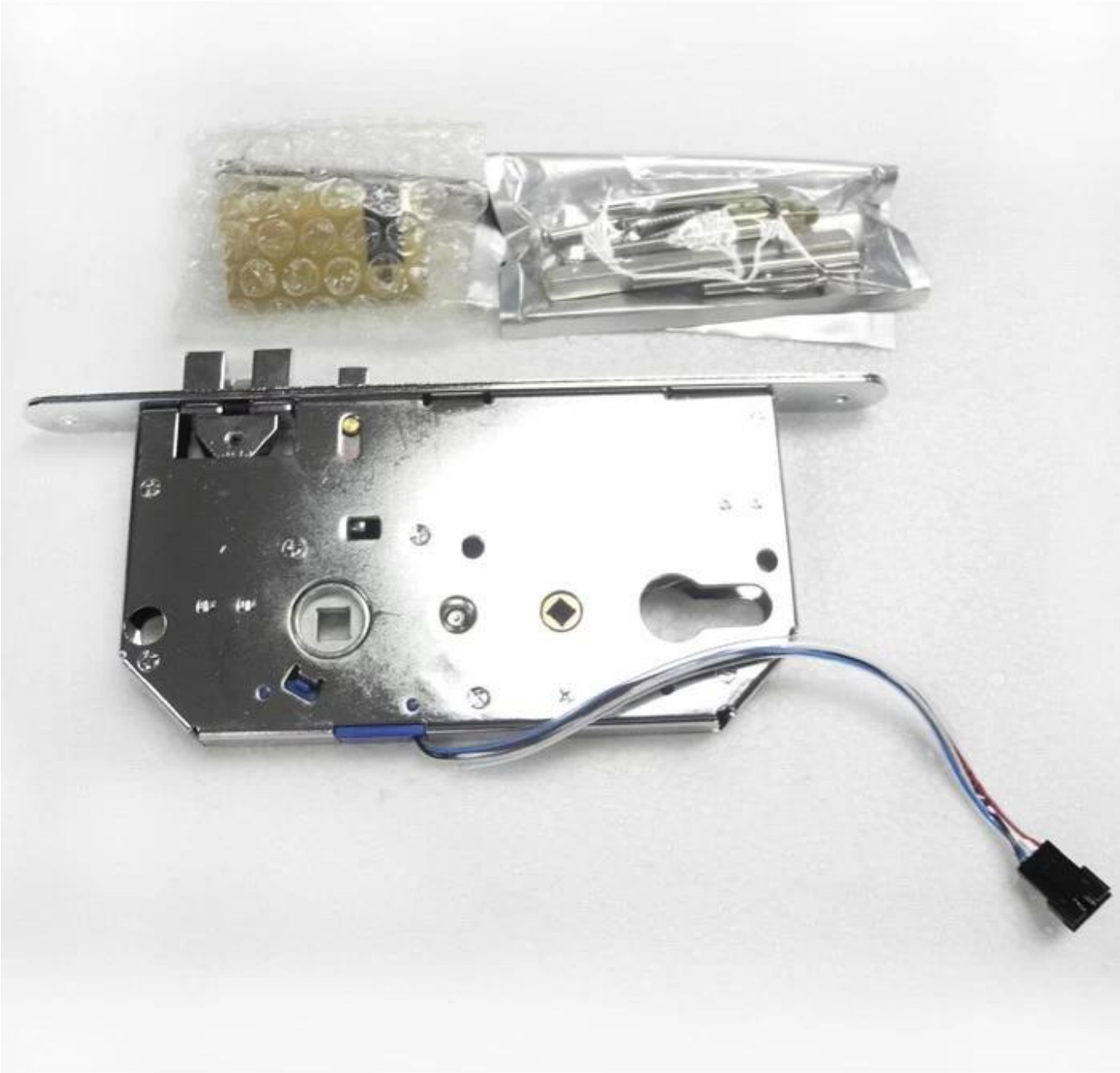
DIGITAL LOCK