□□□□□□□□□□□□□**PY-FR1200**

□□□□□□□□□□Temic□□□□□ □□□□□□□□□□□□□ rfid□□□□□

□□□

□□□□□	324MHz□
□□□	□□□□□
□□	RS485
□□□□	□□□□□
□□□□	□□RF□□□
□□□□	□□□
□□□□	12VDC
□□□□	0□45
□□□W * H * D□□□	50 * 102 * 37.3
□□□□	IP65
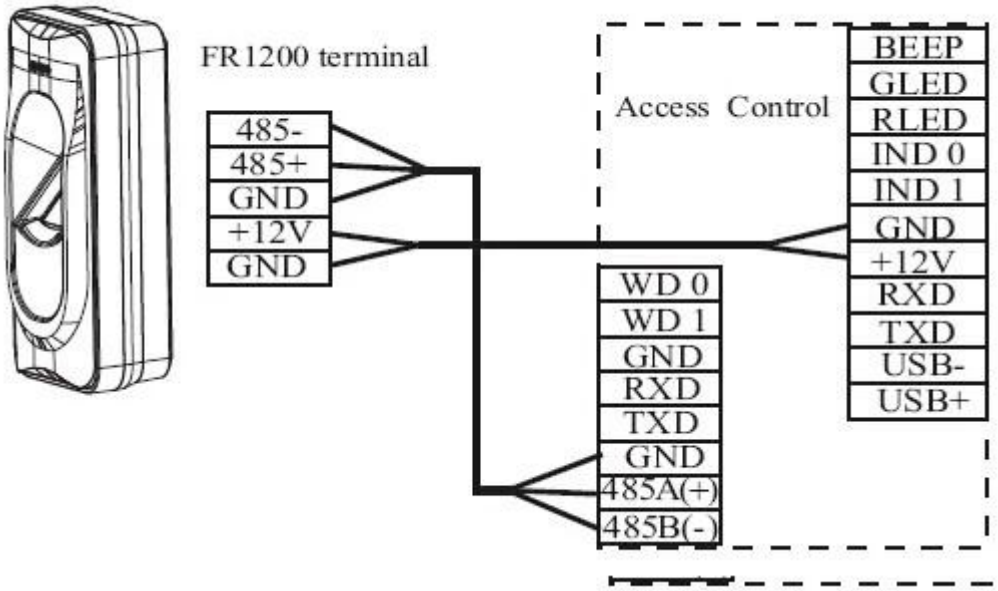
(2) Connection With Standalone Access Control