European style security fingerprint and password door lock PY-5500

supplier:access control system price, Finger & ID card time attendance company, rfid access control system

Features:

- Card Type: MIFARE® Induction Card
- Password Input by Touching Key Pression
- Microwave Induction
- The lock opening modes can be set by your choice. Use MIFARE® cards or passwords separatel y to open/ Only MIFARE® cards and password used together could open the locks.
- The cards are set by the lock sytem and software is not needed. 2 management cards and 200 cards at most.
- The passwords can be modified by your choice. 1 management password and 50 door opening passwords at most.
- Messy codes could be used when inputting passwords. 12 digits at most.
- You can set the lock in common open state.
- Alarm of False Closing
- Indication of Lacking of Voltage
- Batteries supply the power. External source can be used.
- Combined Mode: using MIFARE® cards and password to open doors simultaneously.

Technical Parameters:
Working voltage: 6.0V (4 pieces of No.5 alkaline batteries)
Static power supply: <100μA
Dynamic power supply: <200mA
Lifespan of batteries: 10 months or above
Indication of lacking voltage: 4.5V
Induction distance: >25mm
Working temprature: 0`C~70`C
Working humidity: ≤80%

Picture Shows:

Part Name

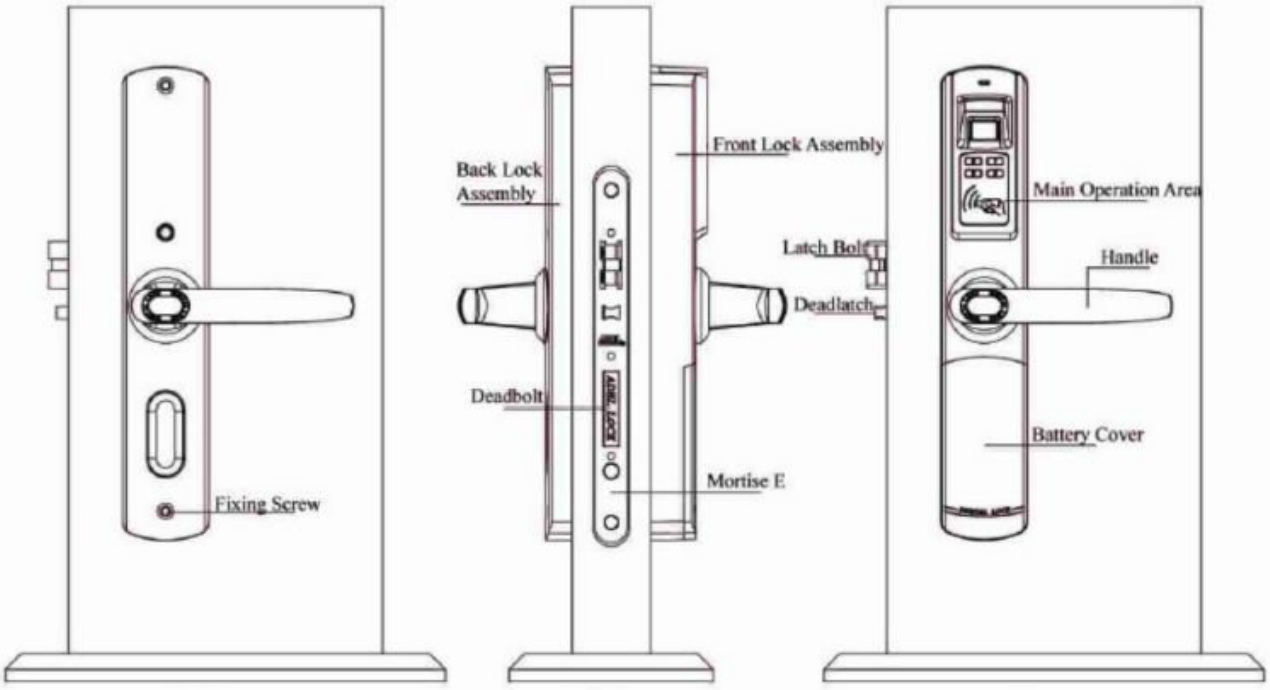

Back Side Front

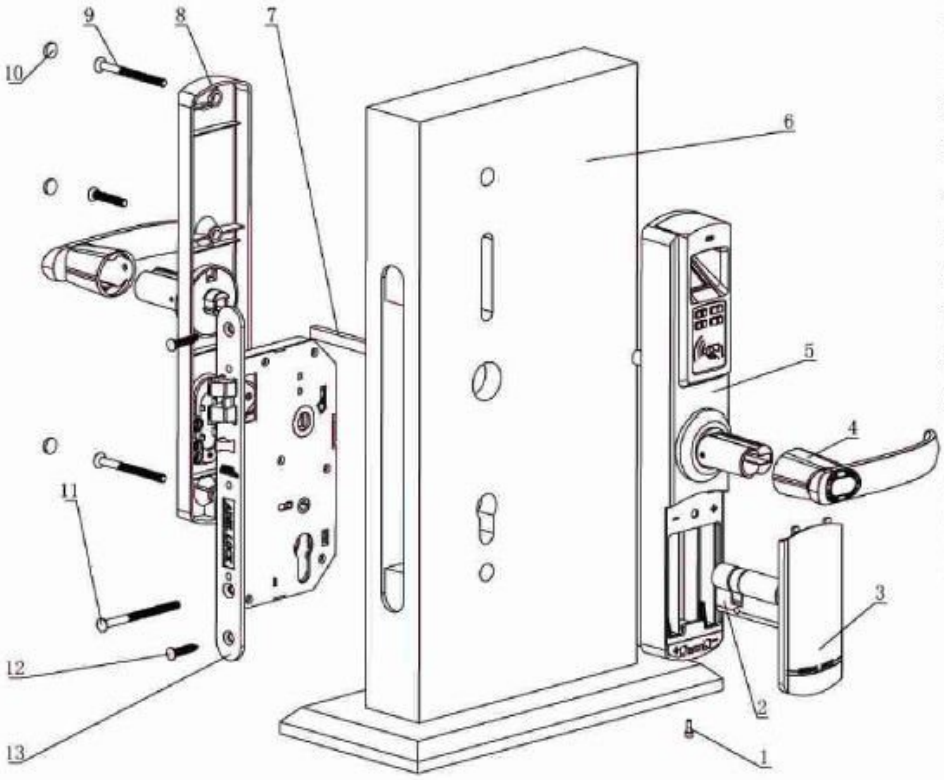

Part Name:

1. Hexagonal screw (M3*8)
2. Cylinder
3. Battery cover
4. Handle
5. Front lock assembly
6. Door
7. Square shaft
8. Back lock assembly
9. Fixing screw (M5)
10. Screw cover
11. Cylinder fixing screw (M5*70)
12. Wood screw (M4*25)
13. Mortise

DIGITAL LOCK
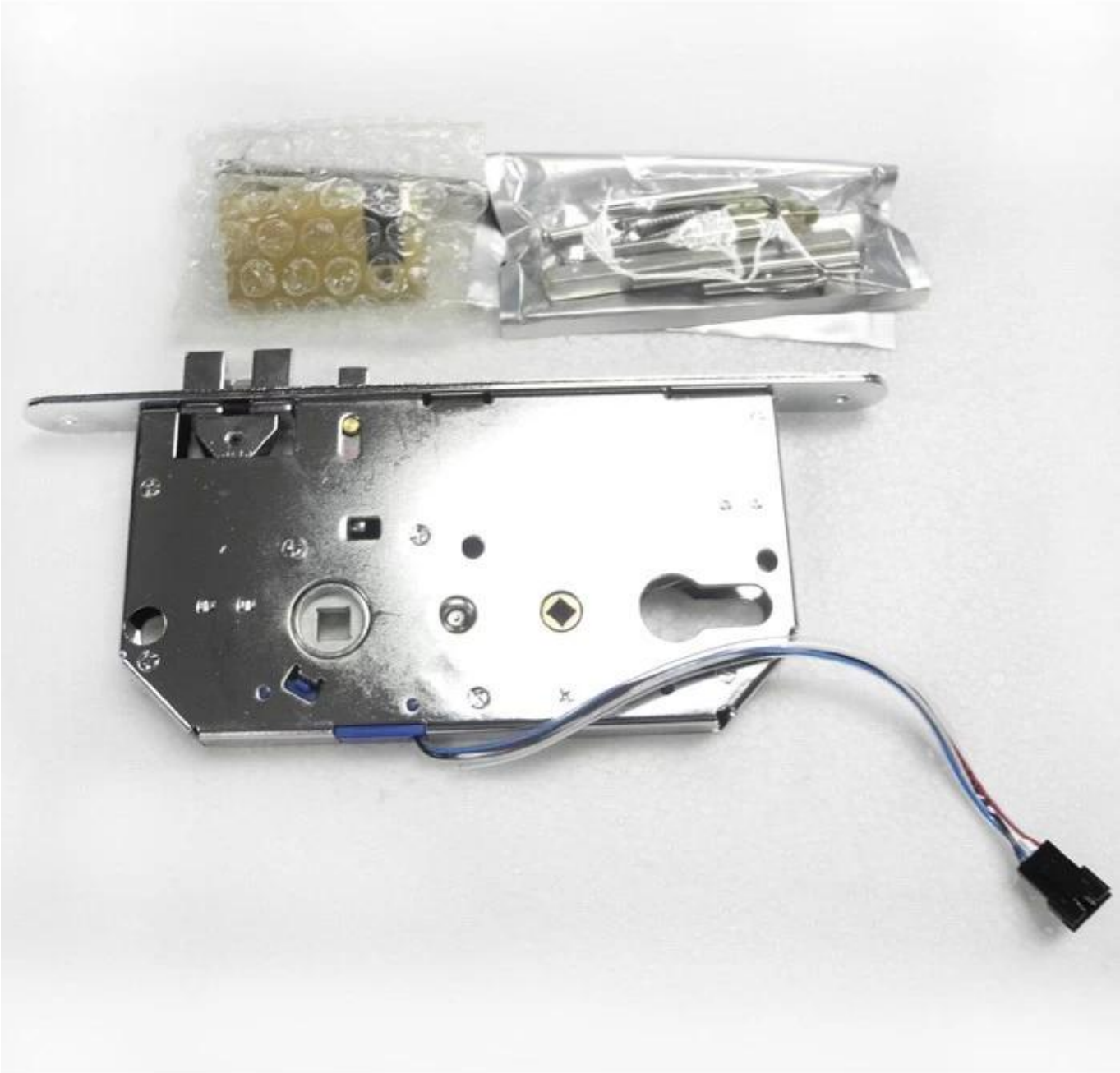
DIGITAL LOCK